baby&child
RESTORATION HARDWARE

WINDOW HARDWARE INSTALLATION INSTRUCTIONS

GETTING STARTED

- Read through the instructions entirely before starting.
- Remove hardware from packaging.
- Do not dispose of packaging until the installation has been completed to your satisfaction.
- Make certain all parts indicated on packaging list are included.
- Make certain all tools and supplementary hardware are on hand before starting.

TOOLS REQUIRED FOR INSTALLATION (NOT PROVIDED)

Installing on Wood Molding or Wood Studs:

-Screwdriver, level, tape measure, pencil and power drill

Installing on Wallboard:

-Screwdriver, level, tape measure, pencil, power drill, molley bolt screws or self-drilling anchors

Installing in Concrete, Stone, Brick or Tile:

-Screwdriver, level, tape measure, pencil, masonry drill, anchors, plugs or screws

ASSEMBLY INSTALLATION

1. Determine the appropriate location for the rod. It is recommended that the outside brackets be installed a minimum of 2.5" (7cm) above and beyond the window. 6' (183 cm) or longer rods will have a third bracket to install at the center of the rod, at the same level as the outside brackets. (**see fig. 1**)
   The height of the rod should be calculated by:
   A. Measuring the length of the drapery panel.
   B. Considering use of rings or rod pocket.
   C. Deciding if you want the hem of the drapery panel hanging slightly above the floor, touching the floor or pooling on the floor.

2. Mark the appropriate location of each bracket with a pencil. Pre-drill the screw holes using a 1/4" (6.5 mm) drill bit. Install the first bracket on the outside edge of the window. After securely installing the first bracket, rest the rod in the bracket and extend rod to the location of the second bracket. Using a level, determine placement of the second bracket to ensure that it is aligned with the first bracket. Mark that height, and install the second bracket. If there is a third bracket, use the level for proper alignment as well. (**see fig. 2 & fig. 3**)

3. Attach a finial at one end of the rod. If drapery has a rod pocket, feed the drapery onto the rod through the drapery's opening along the top, and then attach the second finial to the other end of the rod. If you wish to use rings, place these on the rod before attaching the second finial. (**see fig. 4**)

4. Place the rod into the brackets. The finials should rest outside the brackets. If there is a central bracket, it should rest between the drapery panels. (**see fig. 5**)

5. Use an Allen wrench to tighten the screw in each bracket. This holds the rod firmly in place within the bracket. (**see fig. 6**)

6. Slip c-ring over the rod and insert narrow edge into the gap where the rod telescopes. This will facilitate moving the drapery rings or fabric across the rod. **(see fig. 3)**

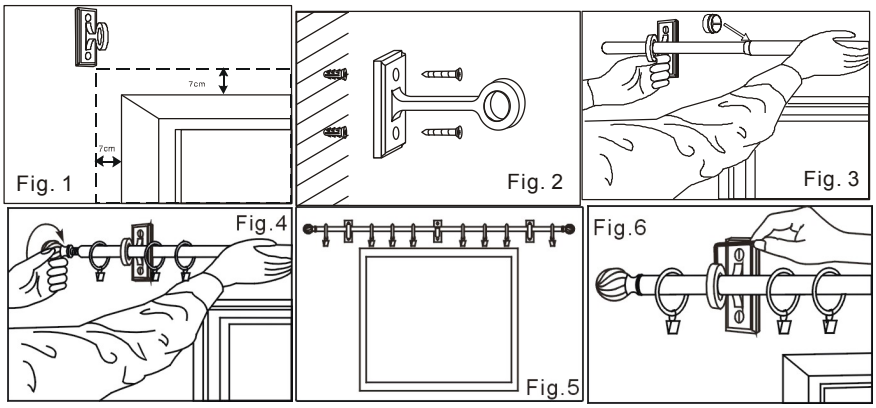

IMPORTANT**:** It is highly recommended that the brackets be attached to a structural wood support, such as molding around the window or wooden studs within the walls. If the studs within the wall are metal, you must pre-drill into the metal stud and use sheet-metal screws.