baby&child

RESTORATION HARDWARE

All Restoration Hardware cribs are designed to meet the highest safety standards and comply with all U.S. and Canadian cribs and cradles regulations.

Assembly Instructions for Crib

baby&child

RESTORATION HARDWARE

Restoration Hardware Baby & Child
11640 Harrel St. Suite B
Mira Loma, California 91752
rhbabyandchild.com
Made in Vietnam

102200

"Jourdan Crib "

Distributed in the U.S.A by:
Restoration Hardware Baby & Child
11640 Harrel St. Suite B
Mira Loma, California 91752
rhbabyandchild.com

Distributed in Canada by:
Restoration Hardware Canada Inc.
1500-1055 West Georgia Street,
Vancouver, British Columbia V6E 4N7

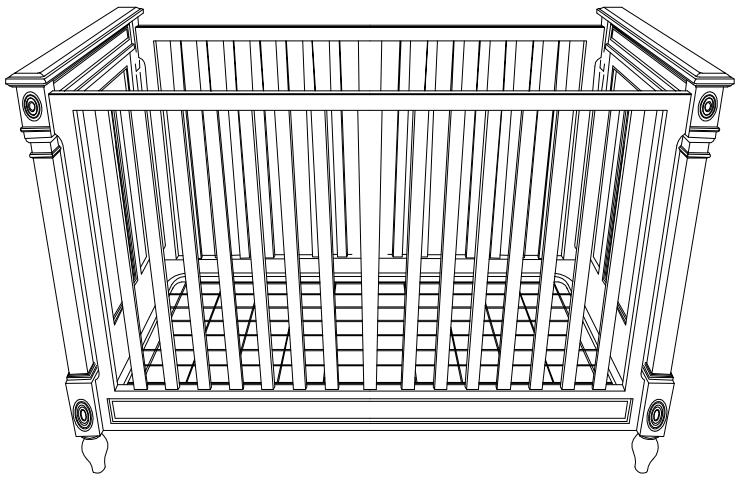

⚠ **WARNING:** Read all instructions before assembling this product. **KEEP INSTRUCTIONS FOR FUTURE USE**

CUSTOMER SERVICE

If you are missing parts or have any questions about this product, contact us first. You can also order parts by writing to the address above .Include the product model number, color, and a brief description of the part. Call 1-800-762-1751.

CARE AND CLEANING

DO NOT scratch or chip the finish. **DO NOT** use abrasive chemicals for cleaning. Clean with mild soap on soft rag. Rinse and dry thoroughly. If the crib is to be stored, store in a cool dry place and carefully package all original hardware to protect from loss.

TOOLS AND INSTALLATION

Tools Necessary: Allen Key (included).
Flathead Screwdriver (not included).
Phillips Screwdriver (not included).
Note: It may be easier to assemble product with two people.

NOTE: When inserting bolts, turn clockwise until tight. Then loosen 1/2-3/4 of a turn. After crib is completely assembled, return to each bolt and tighten. Use wax or soap on all bolts to facilitate assembly.

IMPORTANT SAFETY INFORMATION FOR CRIBS

⚠ **WARNING:** Infants can suffocate on soft bedding. Never add a pillow or comforter. Never place additional padding under an infant.

⚠ **WARNING: Failure to follow these warnings and the assembly instructions could result in serious injury or death.**

To reduce the risk of **SIDS**, pediatricians recommend healthy infants be placed on their backs to sleep, unless otherwise advised by your physician.

Strangulation Hazard:

- Strings can cause strangulation! **DO NOT** place items with a string around a child's neck, such as hood strings or pacifier cords. **DO NOT** suspend strings over a crib or attach strings to toys.
- To help prevent strangulation tighten all fasteners. A child can trap parts of the body or clothing on loose fasteners.
- **DO NOT** place crib near window where cords from blinds or drapes may strangle a child.

Fall Hazard:

- When child is able to pull to a standing position, set mattress to lowest position and remove bumper pads, large toys and other objects that could serve as steps for climbing out.
- When child is able to climb out or reaches the height of 35 in (90cm), the crib shall no longer be used, and the child should be placed in a youth or regular bed.

- Check this product for damaged hardware, loose joints, missing parts or sharp edges before and after assembly and frequently during use. **DO NOT** use crib if any parts are missing, damaged or broken. Contact customer service at 1-800-762-1751 for replacement parts and instructional literature if needed. **DO NOT** substitute parts.
- **DO NOT** use a water mattress with this crib.
- If refinishing, use a non-toxic finish specified for children's products.
- Follow warnings on all products in a crib.
- Never use plastic shipping bags or other plastic film as mattress covers because they can cause suffocation.
- Infants can suffocate in gaps between crib sides and a mattress that is too small.

IMPORTANT SAFETY INFORMATION FOR CRIBS

CAUTION: ANY MATTRESS USED IN THIS CRIB MUST BE AT LEAST 27-1/4 INCHES BY 51-5/8 INCHES WITH A THICKNESS NOT EXCEEDING 6 INCHES.

WARNING

•Do not use this crib if the enclosed or attached instructions cannot be strictly adhered to. Do not use this crib if the child is able to climb out unaided or is taller than 90 cm. Do not place cords, straps or similar items that could become wound around the child's neck in or near this crib. Ensure that the sides are properly latched or locked in place when the crib is occupied. The mattress used with this crib should not be more than 15 cm thick and should be of such length and width that the gap between the mattress and the sides of the crib is not more than 3 cm when the mattress is pushed into the corner of the crib.

•Parents should inspect the crib regularly--before putting the child in the crib each day--and confirm that every component of the crib is properly and securely in place.

IMPORTANT SAFETY INFORMATION FOR TODDLER & DAY BEDS

⚠ WARNING: ENTRAPMENT / STRANGULATION HAZARD

Infants have died in toddler beds from entrapment and strangulation. Failure to follow these warnings and the assembly instructions could result in serious injury or death.
NEVER use bed with children under 15 months.
NEVER place bed near windows where cords from blinds or drapes may strangle a child.

- The mattress intended for use on the bed shall be a full-size crib mattress having minimum dimensions of 51-5/8 inches (1310mm) in length, 27-1/4 inches (690mm) in width and 4 inches (100 mm) in thickness, not exceeding 6 inches (152 mm) in thickness.
- If guardrails are used as the mattress containment means, guardrail(s) provided must be used to avoid the formation of a gap between the mattress and the bed that could cause an entrapment.
- DO NOT place bed near windows where cords from blinds or drapes may strangle a child.
- DO NOT place items with a string , cord, or ribbon around a child's neck, such as hood strings or pacifier cords.
- DO NOT suspend strings over a toddler bed for any pacifier cords.
- A child using the toddler or day bed shall be at least 15 months of age and shall not weigh more than 50lbs (22.7kgs).

ITEM IDENTIFICATION

For ease of identification, all parts are labeled to correspond to the step number in which the part is used.

Step #1 Side panel and rail frame assembly (Page 7 of 11)
Step #2 Mattress support arm assembly.
Stabilizer rail assembly
Mattress height adjustment (Page 8 of 11)
Step #3 Installation of support slat into the side panel (Page 9 of 11)
Step #4 Rail frame assembly (Page 10 of 11)
Step #5 Toddler rail assembly (Page 11 of 11)

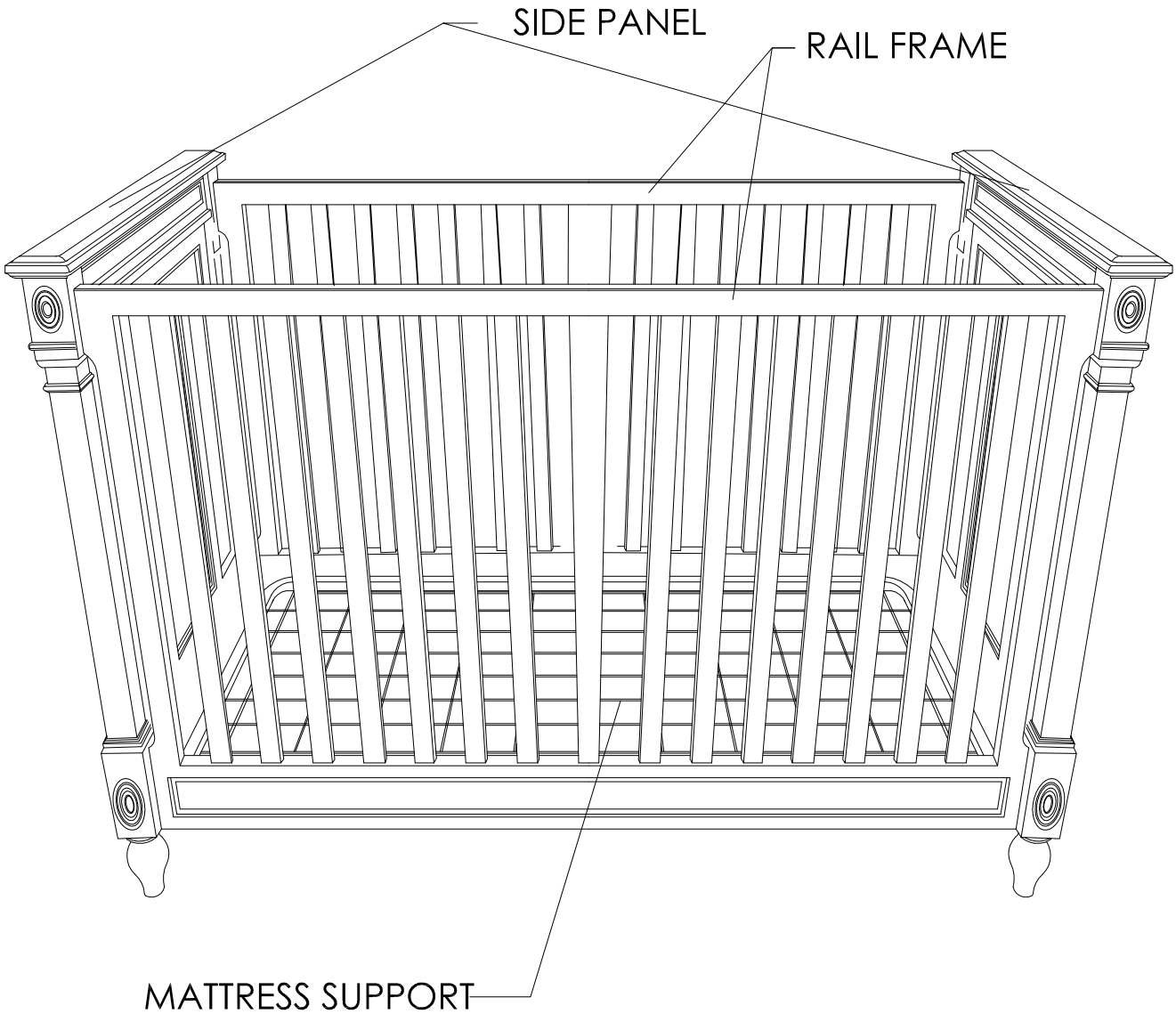

STEP #1

SIDE PANEL AND A RAIL
FRAME ASSEMBLY

STEP# 1.1
Bring the side panels and the rail frame in upright position.

NOTE:
At both ends of the rail frame are holes for the bolt to pass through that correspond to the hole on both ends of the side panel with pre-installed insert nut .

STEP#1.2:
Align the hole of the rail frame into the hole of the side panel then insert the Allen head bolt into hole and turn clockwise to tighten. Tighten the bolt with Allen wrench provided. Please see **DETAIL A**

Note: DO NOT OVER TIGHTEN

DETAIL A

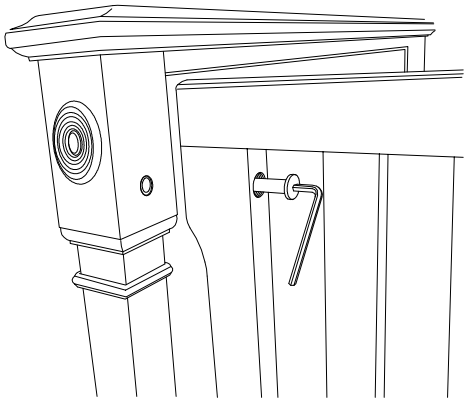

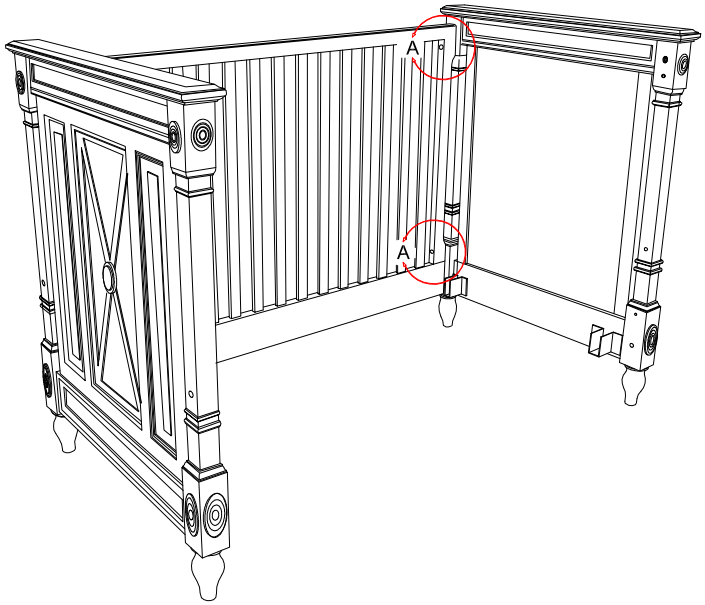

HARDWARE NEEDED FOR STEP #1:

BOLT WITH LOCK WASHER

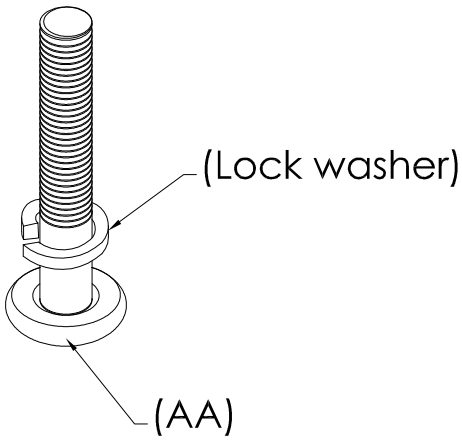

(AA) 1/4" Ø x 2-1/2 in bolts (x 4 pieces)

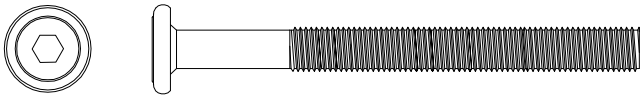

(AA) lock washer (4 pieces)

Allen Wrench (1 piece)

STEP #2
MATTRESS SUPPORT ARM ASSEMBLY
STABILIZER RAIL ASSEMBLY
MATTRESS HEIGHT ADJUSTMENT

STEP #2.1
Lay mattress support flat with stabilizer rail on each side

Note:
On each end of the arm of the mattress support, there is a hole for the bolt to pass through that corresponds to the holes located in the frame of the mattress support.

STEP #2.2:
Insert the bolt into the desired hole of the frame through the hole on the arm support. Fasten the bolt with plain washer, lock washers & hexagonal nut provided. Repeat procedure on other arms of the mattress support. Please see **DETAIL B**

WARNING:
Set the mattress support to the desired height by adjusting the support arms. The mattress support should be at its highest setting for newborns, then adjusted to the lower positions as the child grows and becomes mobile. Once the child is able to stand, the mattress support should be at its lowest position.

STEP #2.3:
Install the stabilizer rail at ends of the arm support as illustrated on **DETAIL C**

HARDWARE NEEDED FOR STEP #2:

(BB) 1-3/8" x 1/4" Ø Mattress Bolt (x8 pieces)

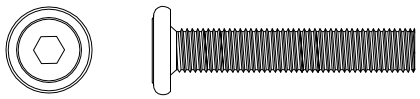

(BB) Mattress Nut (x8 pieces)

(BB)Plain Washer (x8 pieces)

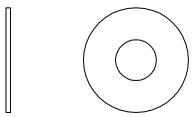

(BB)Lock Washer (x8 pieces)

Allen Wrench (1 piece)

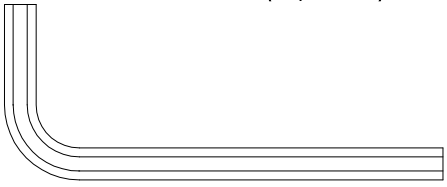

DETAIL B

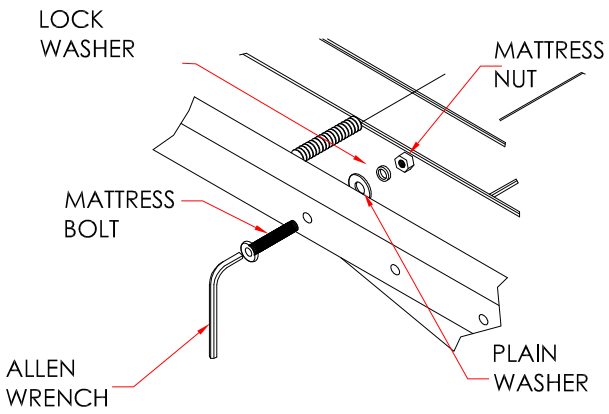

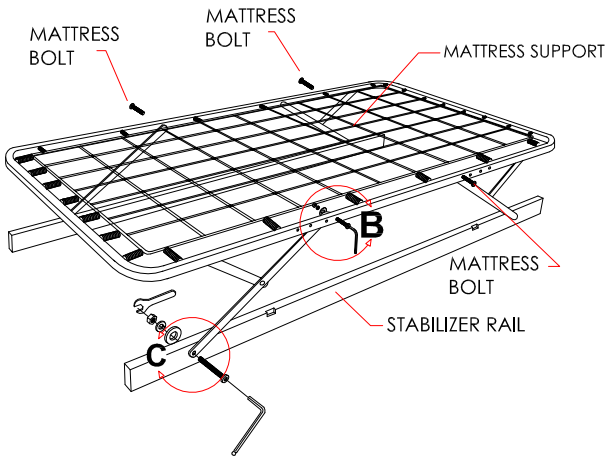

DETAIL C

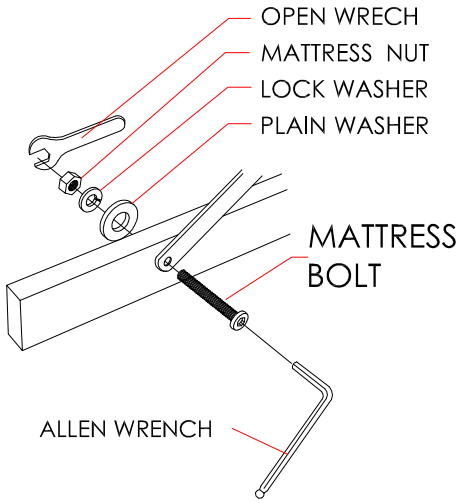

STEP #3
INSTALLATION OF STABILIZER RAILS INTO THE SIDE PANEL

STEP #3.1:
On inside face of both side panels are pre-installed metal brackets, designed to hold the stabilizer rails. Set both ends of the stabilizer rails as illustrated in **DETAIL D.**

STEP #3.2
Once the stabilizer rails are set, gently tilt the crib as illustrated in **DETAIL E,** then fasten the stabilizer rails with bolt together with plain washer and lock washer provided as illustrated in **DETAIL F.**

Detail D

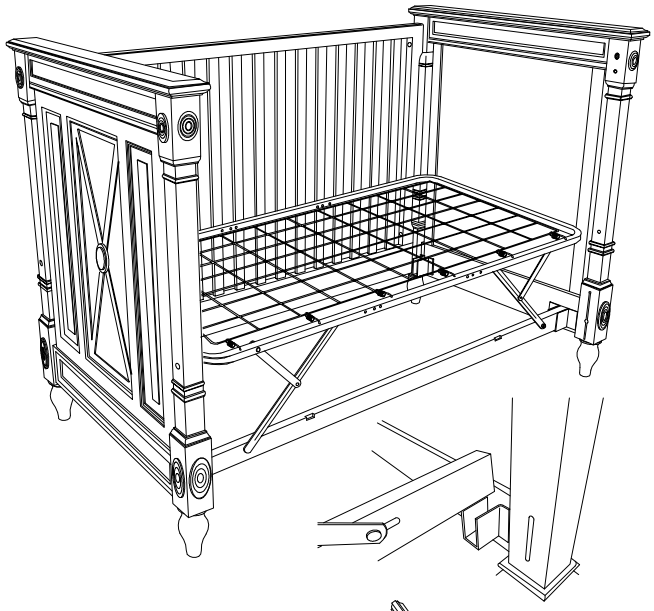

Detail E

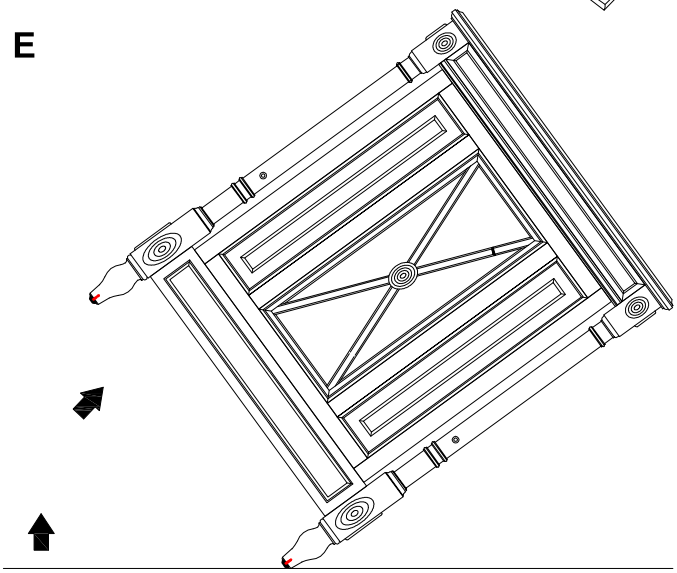

HARDWARE NEEDED FOR STEP #3:

(CC)1/4"Ø x $\frac{13}{16}$" bolts (x 4 pieces)

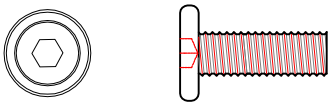

(CC)Plain Washer (x4 pieces)

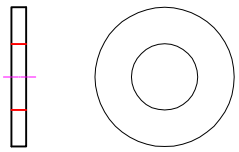

(CC)Lock Washer (x4 pieces)

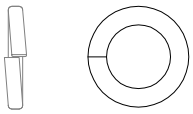

Detail F

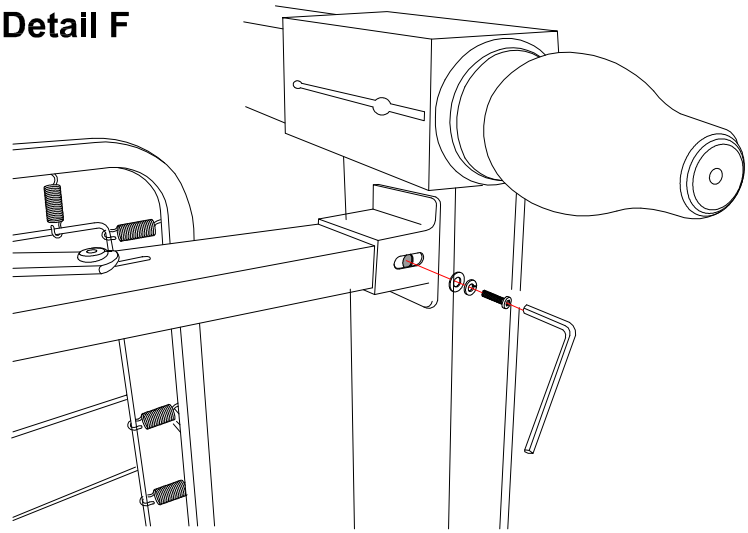

STEP #4
RAIL ASSEMBLY

STEP #4.1:
Please repeat procedure in step #2 for **DETAIL G.**

After assembly retighten all bolts to snug fit. DO NOT OVER TIGHTEN

HARDWARE NEEDED FOR STEP #4:

Detail G

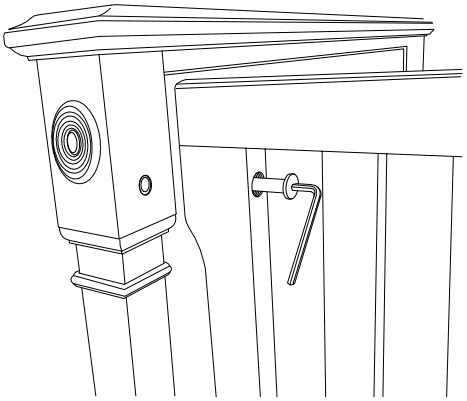

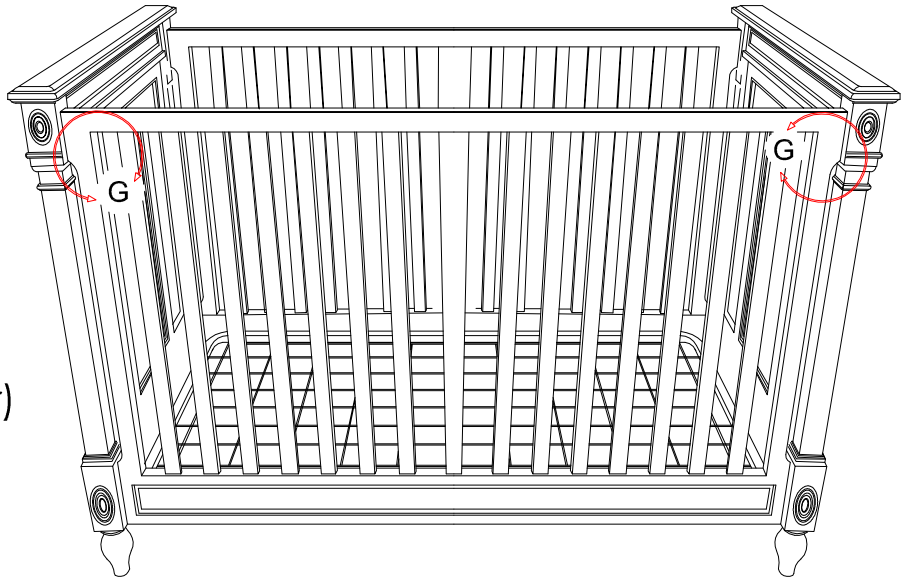

BOLT WITH LOCK WASHER

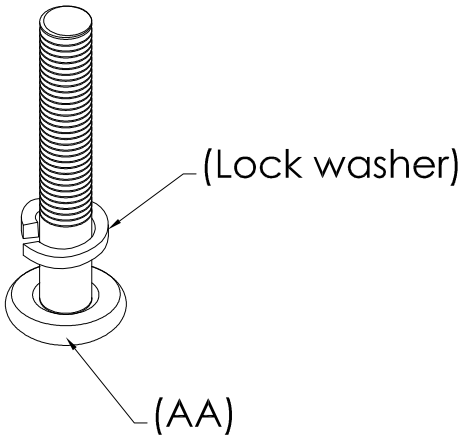

(AA) 1/4" Ø x 2-1/2 in bolts (x 4 pieces)

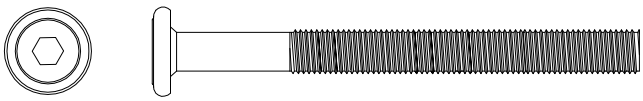

lock washer (4 pieces)

Allen Wrench (1 piece)

STEP #5
TODDLER RAIL ASSEMBLY

STEP #5.1:
Remove both rail frames of the crib by loosening all the bolts installed.

STEP #5.2:
Gently tilt the crib and unscrew the stabilizer rails underneath the metal bracket .

-**NOTE:** If mattress support is not in the lowest position, unscrew mattress support bolts and move to the lowest position.

STEP #5.3
On inside face of both side panels there is a cavity for the hook and a hole for the Allen bolt to pass through which corresponds to the hooks on both ends of the toddler rails and holes with pre-installed insert nuts. Align and insert the hook of the toddler rail into the cavity of the side panel, then engage Allen head bolt (BB) in the hole and tighten with Allen wrench provided. Please see **DETAIL H**

NOTE: Cover the holes located on the post of both sides of the side panel with bolt (DD) provided.

STEP #5.4
Repeat step #3 installation of stabilizer rails into the side panel for **DETAIL I**

After assembly, re-tighten all bolts to a snug fit.

DETAIL H

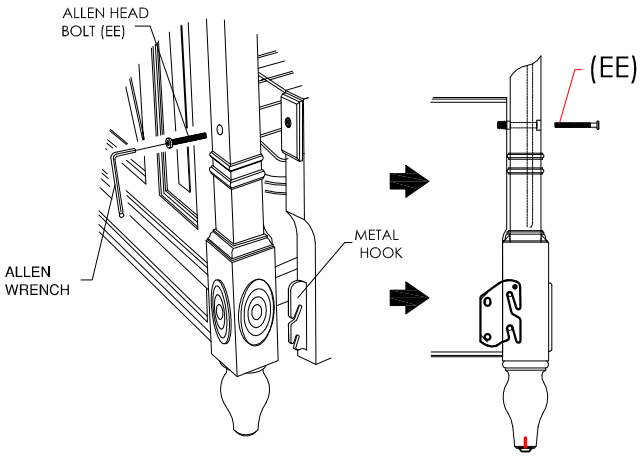

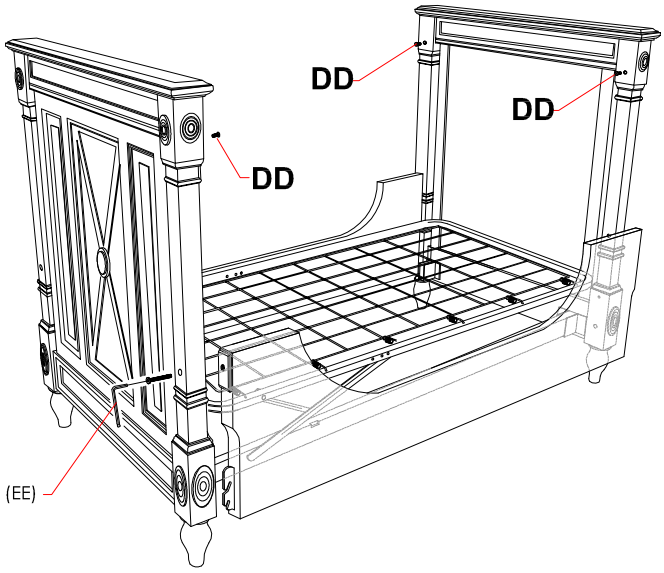

HARDWARE FOR STEP #5

(DD) 1/2 in. bolt (x4 pieces)

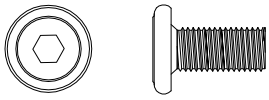

(EE) 2 1/2 in. bolt (x4 pieces)

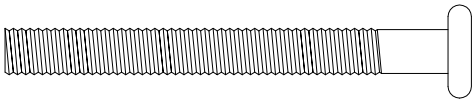

Allen Wrench (1 piece)

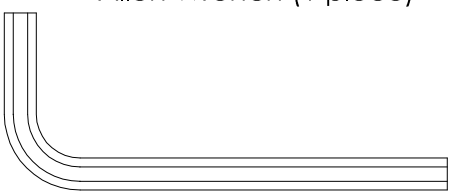

Detail I

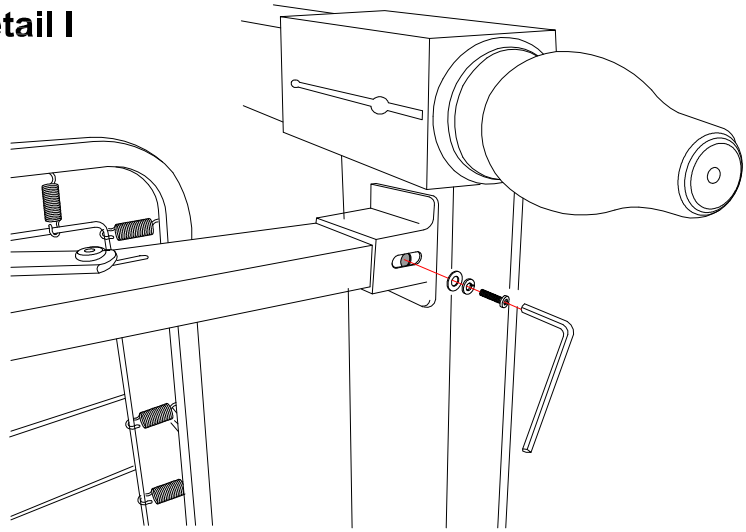

Thank you for your purchase
www.rhbabyandchild.com