baby&child

RESTORATION HARDWARE

LEA TWIN & FULL UPHOLSTERED PLATFORM BED

WARNING: ADULT ASSEMBLY ONLY OWING TO THE PRESENCE OF SMALL PARTS, SHARP POINTS AND EDGES

Customer Service- If you are missing parts or have any questions about this product, please contact us at : 1-800-762-1751

PART LIST

A [1] HEADBOARD
B [2] SIDE RAILS
C [1] FOOTBOARD
D [1] SLAT ROLL

TOOLS NEEDED

- Screwdriver

HARDWARE LIST

1	5/16" x 4" Threaded Rod		4pcs
2	5/16" Curved Slotted Washer		4pcs
3	5/16" x 12mm Nut		4pcs
4	12mm Wrench		1pc
5	8 x 30mm Wood Screw		4pcs
6	1/4" x 3/4" Small Bolt		4pcs
7	1/4" Spring Washer		4pcs
8	1/4" Flat Washer		4pcs
9	4mm Allen Key		1pc

ASSEMBLY INSTRUCTION

Note: Bed can be assembled by one person rather easily, but if two people are available it is easier and the operation will require less preparation. The instructions are written assuming one person is assembling the bed.

1. Place the Headboard (A) upright in the position you wish the bed to be in when fully assembled. The Headboard bedfast hardware should be facing the inside, toward the mattress.

   Secure the Threaded Rod (1) to the Headboard (A). Place towels or some other soft item (not included) under each Side Rail (B). These will protect the floor while lifting the rails, allowing for easier attachment to the headboard & foot rail. Raise the Side Rail (B) up and place the rod into the Side Rail (B) at the bore holes' position, insert Curved Slotted Washer (2) and tighten Hex Nuts (3) using Hex Wrench (4) (as shown in diagram 1).
   Repeat the procedure with the side rail end and Footboard (C).

2. Attach metal bracket of the Side Rails (B) to the Headboard (A) by using Spring Washer (7), Flat Washer (8), Small Bolt (6) and tighten with Allen Key (9) (as shown in diagram 2).

3. Lay the Slat Roll (D) in between the Side Rails (B) and use Wood Screws (5) to fasten 2 end slats to the side rails with a screwdriver (as shown in diagram 3).

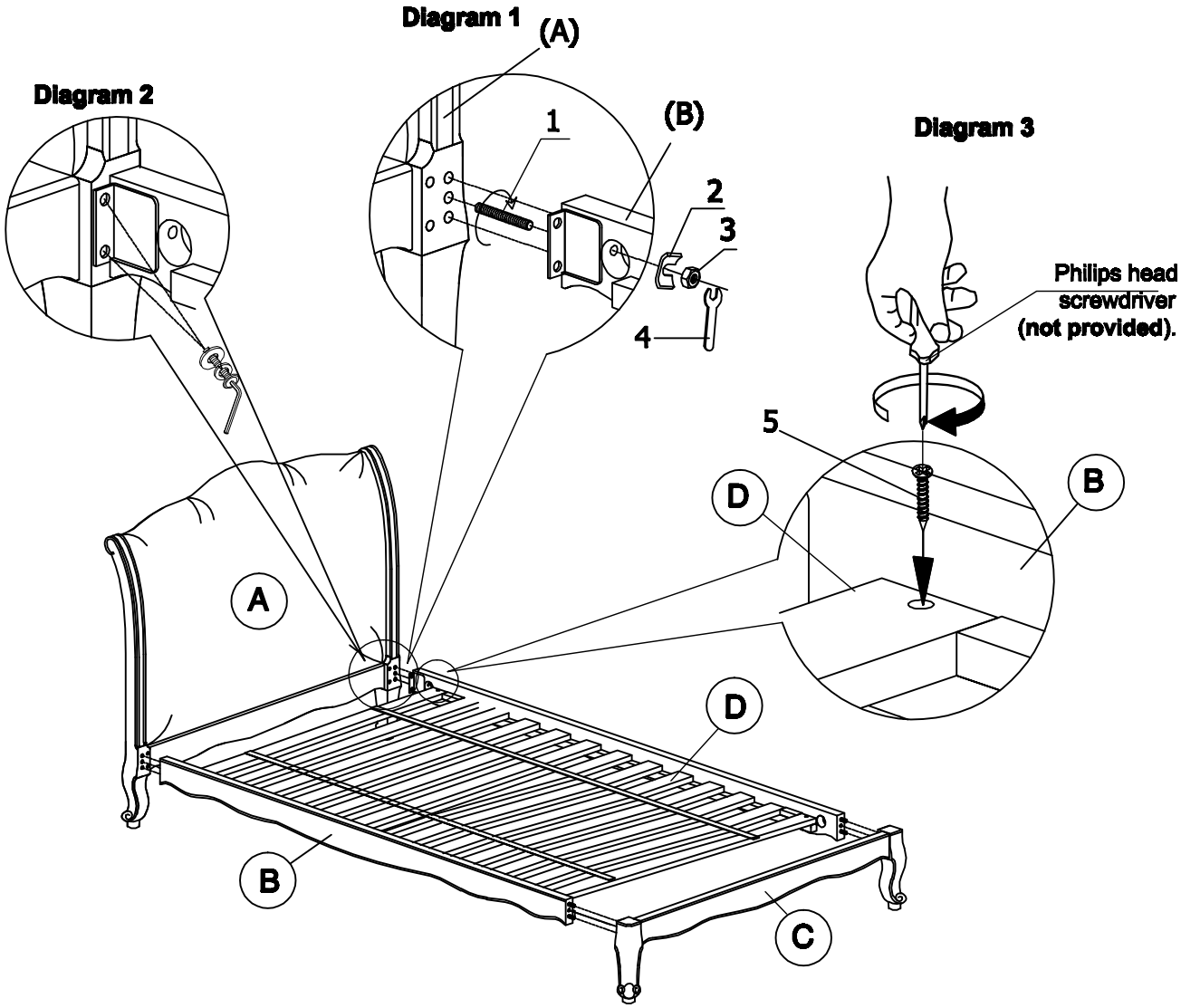

Thank you for your purchase
www.rhbabyandchild.com