baby&child

RESTORATION HARDWARE

HAYLAN WIDE DRESSER

FURNITURE TIPPING RESTRAINT INSTRUCTION

Young children may be injured by tipping furniture and the use of a tipping restraint is highly recommended.

When properly installed, this restraint could provide protection against the unexpected tipping of furniture due to small tremors, bumps or climbing. We recommend mounting this restraint to a wall stud.

WARNING : This product is only a deterrent. It is not a substitute for proper adult supervision.

PART LIST

A [4] PLASTIC BRACKET
B [2] RESTRAINT STRAP
C [4] PHILLIPS SCREWS M4 x 30mm
D [4] PHILLIPS SCREWS M4 x 20mm
E [4] PLASTIC ANCHOR

INSTALLATION INSTRUCTION

1. Attach two of the mounting brackets near the top back edge of the furniture piece by inserting the shorter screw.
2. Determine the final position of the furniture piece. Mark locations on the wall approximately 2" below the brackets mounted to the back of the furniture.
3. Drill a shorter hole into the wall stud. If wall stud is not available, drill a hole into the wall and insert plastic anchor. Gently tap the anchor until the flange is flush with the wall.
4. Attach the second set of brackets by inserting the longer screw through the bracket and into the wall.
5. Place the furniture so that the brackets on the back edge are in line with the brackets in the wall.
6. Lace one end of the nylon restraint strap down through each bracket. Bring both ends together and slide the beaded end until it snap locks into the keyhole slot.
7. To double lock; return the beaded end back through the keyholes as shown.
8. Check to make sure the straps are securely laced and locked to the brackets

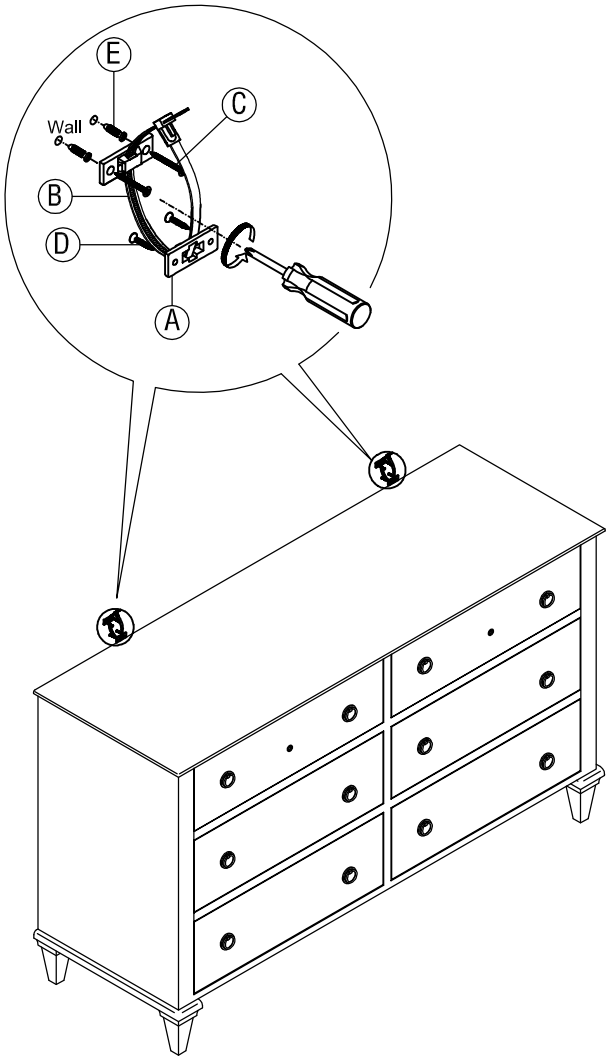

CARE INSTRUCTIONS:

- Dust often using a clean, soft, dry lint-free cloth.
- Blot spills immediately, and wipe with a clean, damp, cloth.
- We do not recommend the use of chemical cleansers, abrasives, or furniture polish on our lacquered finish

Thank you for your purchase

www.rhbabyandchild.com