baby&child
RESTORATION HARDWARE

**All Restoration Hardware cribs are designed to meet the highest safety standards and comply with all U.S. and Canadian cribs and cradles regulations.**

Made in Vietnam
Distributed in the U.S.A. by:
Restoration Hardware Baby & Child
10640 Harrel St. Suite B
Mira Loma, CA 91752
www.rhbabyandchild.com

Distributed in Canada by:
Restoration Hardware Canada, Inc.
1500-1055 West Georgia Street
Vancouver, British Columbia V6E4N7

# MODEL NO. 109387
# "LYND CANOPY CRIB"

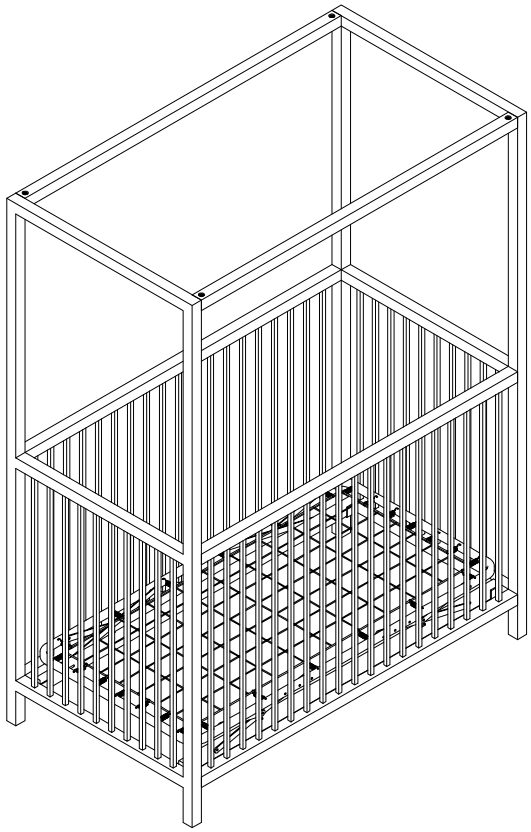

⚠ **WARNING:** Read all instructions before assembling this product. **KEEP INSTRUCTIONS FOR FUTURE USE.**

## CUSTOMER SERVICE

If you are missing parts or have any questions about this product, contact us first. You can also order parts by writing to the address above. Include the product model number, color, and a brief description of the part. Call 1-800-762-1751.

## CARE AND CLEANING

**DO NOT** scratch or chip the finish. **DO NOT** use abrasive chemicals for cleaning. Dust often using a clean, soft, dry cloth. Blot spills immediately and wipe with a clean damp cloth. If the crib is to be stored, store in a cool dry place and carefully package all original hardware to protect from loss.

## TOOLS AND INSTALLATION

Tools Necessary: Allen Key (included)

**NOTE**: It may be easier to assemble product with two people.

**NOTE:** When inserting bolts, turn clockwise until tight. Then loosen ½ - ¾ of a turn. After crib is completely assembled, return to each bolt and tighten. Use wax or soap on all bolts to facilitate assembly

## IMPORTANT SAFETY INFORMATION FOR CRIBS

⚠ **WARNING:** Infants can suffocate on soft bedding. Never add a pillow or comforter. Never place additional padding under an infant.

⚠ **WARNING: Failure to follow these warnings and the assembly instructions could result in serious injury or death.**

To reduce the risk of **SIDS**, pediatricians recommend healthy infants be placed on their backs to sleep, unless otherwise advised by your physician.

***Strangulation Hazard:***

- Strings can cause strangulation! **DO NOT** place items with a string around a child's neck, such as hood strings or pacifier cords. **DO NOT** suspend strings over a crib or attach strings to toys.
- To help prevent strangulation, tighten all fasteners. A child can trap parts of the body or clothing on loose fasteners.
- **DO NOT** place crib near window where cords from blinds or drapes may strangle a child.

***Fall Hazard:***

- When child is able to pull to a standing position, set mattress to lowest position and remove bumper pads, large toys and other objects that could serve as steps for climbing out.
- When child is able to climb out or reaches the height of 35 in (90cm), the crib shall no longer be used, and the child should be placed in a youth or regular bed.
- Check this product for damaged hardware, loose joints, missing parts or sharp edges before and after assembly and frequently during use. **DO NOT** use crib if any parts are missing, damaged or broken. Contact customer service at 1-800-762-1751 for replacement parts and instructional literature if needed.
- **DO NOT** substitute parts.
- **DO NOT** uses a water mattress with this crib.
- If refinishing, use a non-toxic finish specified for children's products.
- Follow warnings on all products in a crib.
- Never use plastic shipping bags or other plastic film as mattress covers because they can cause suffocation.
- Infants can suffocate in gaps between crib sides and a mattress that is too small.

## IMPORTANT SAFETY INFORMATION FOR CRIBS

**CAUTION:** ANY MATTRESS USED IN THIS CRIB MUST BE AT LEAST 27-1/4 INCHES BY 51-5/8 INCHES WITH A THICKNESS NOT EXCEEDING 6 INCHES.

# WARNING

- **DO NOT** use this crib if the enclosed or attached instructions cannot be strictly adhered to. **DO NOT** use this crib if the child is able to climb out unaided or is taller than 90 cm. **DO NOT** place cords, straps or similar items that could become wound around the child's neck in or near this crib. Ensure that the sides are properly latched or locked in place when the crib is occupied. The mattress used with this crib should not be more than 15 cm thick and should be of such length and width that the gap between the mattress and the sides of the crib is not more than 3 cm when the mattress is pushed into the corner of the crib.

- Parents should inspect the crib regularly before putting the child in the crib each day and confirm that every component of the crib is properly and securely in place.

**IMPORTANT SAFETY INFORMATION FOR TODDLER & DAY BEDS**

# ⚠ WARNING: ENTRAPMENT / STRANGULATION HAZARD

Infants have died in toddler beds from entrapment and strangulation.
Failure to follow these warnings and the assembly instructions could result in serious injury or death.
**NEVER** use bed with children under 15 months.
**NEVER** place bed near windows where cords from blinds or drapes may strangle a child.

- The mattress intended for use on the bed shall be a full-size crib mattress having minimum dimensions of 51-5/8 inches (1310mm) in length, 27-1/4 inches (690mm) in width and 4 inches (100 mm) in thickness, not exceeding 6 inches (152 mm) in thickness.
- If guardrails are used as the mattress containment means, guardrail(s) provided must be used to avoid the formation of a gap between the mattress and the bed that could cause an entrapment.
- **DO NOT** place bed near windows where cords from blinds or drapes may strangle a child.
- **DO NOT** place items with a string , cord, or ribbon around a child's neck, such as hood strings or pacifier cords.
- **DO NOT** suspend strings over a toddler bed for any pacifier cords.
- A child using the toddler or day bed shall be at least 15 months of age and shall not weigh more than 50lbs (22.7kgs).

# ITEM IDENTIFICATION

For ease of identification, all parts are labeled to correspond to the Step number in which the part is used.

Step #1 Side rails and 1st end panel assembly (Page 6)
Step #2 Canopies and 1st end panel assembly (Page 7)
Step #3 2ND end panel assembly (Page 8)
Step #4 Mattress support arm assembly
Stabilizer rail assembly
Mattress height adjustment (Page 9)
Step #5 Installation of stabilizer rail into the end panels (Page 10)

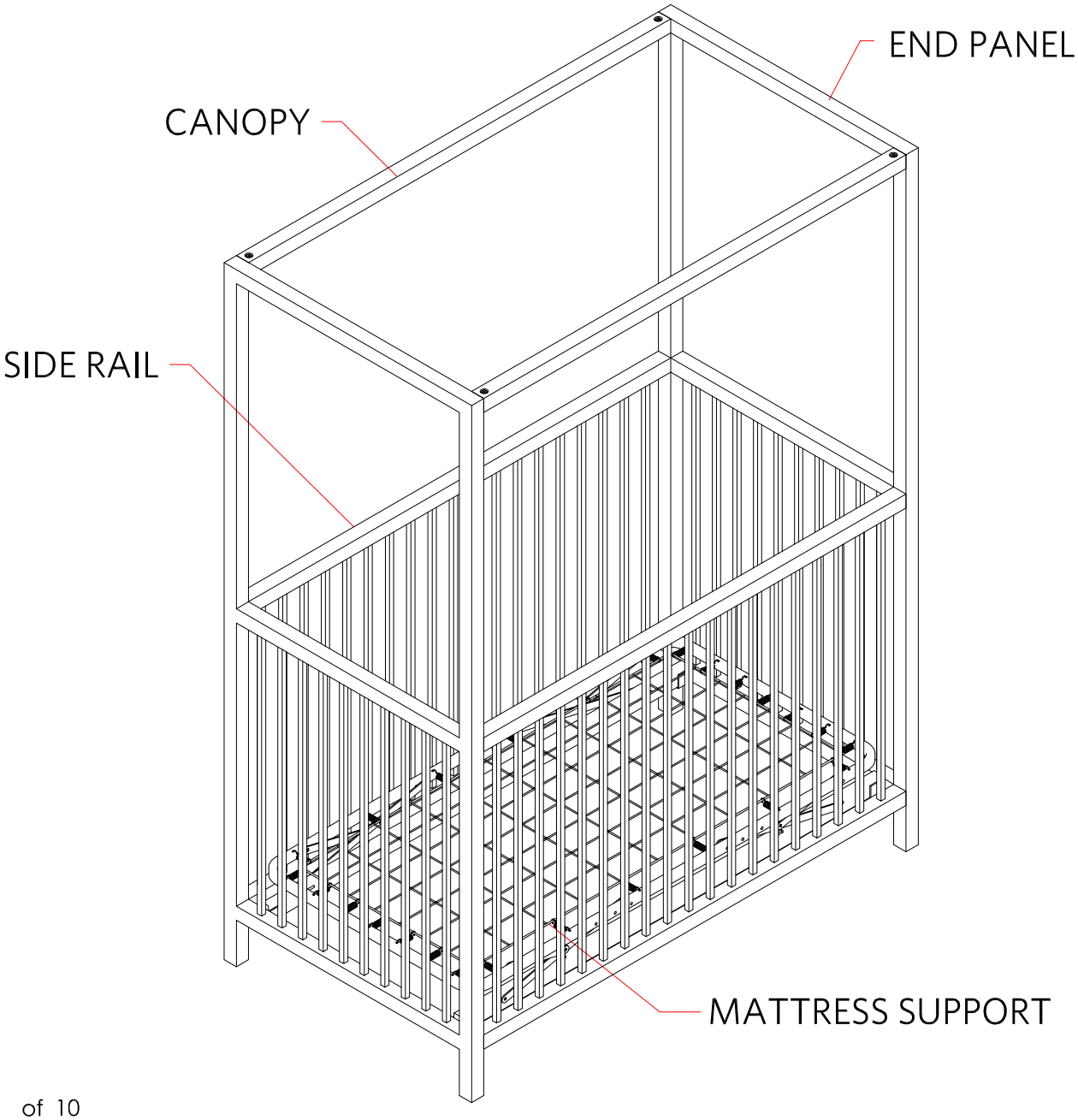

## STEP #1
## SIDE RAILS & 1ST END PANEL ASSEMBLY

STEP #1.1
Bring the side rails and the first end panel in upright position. Align and insert the locator dowels of the end panel into the holes on the ends of the side rails. On the other ends of the side rails, insert honeycomb from packing materials (a combination of 1 layer honeycomb 90mm and 1 layer honeycomb 30mm is recommended) See FIGURE 1-A.

STEP #1.2
Insert Allen bolts (BB) together with lock washers and plain washers to fix the end panel to the side rails. See FIGURE 1-B.

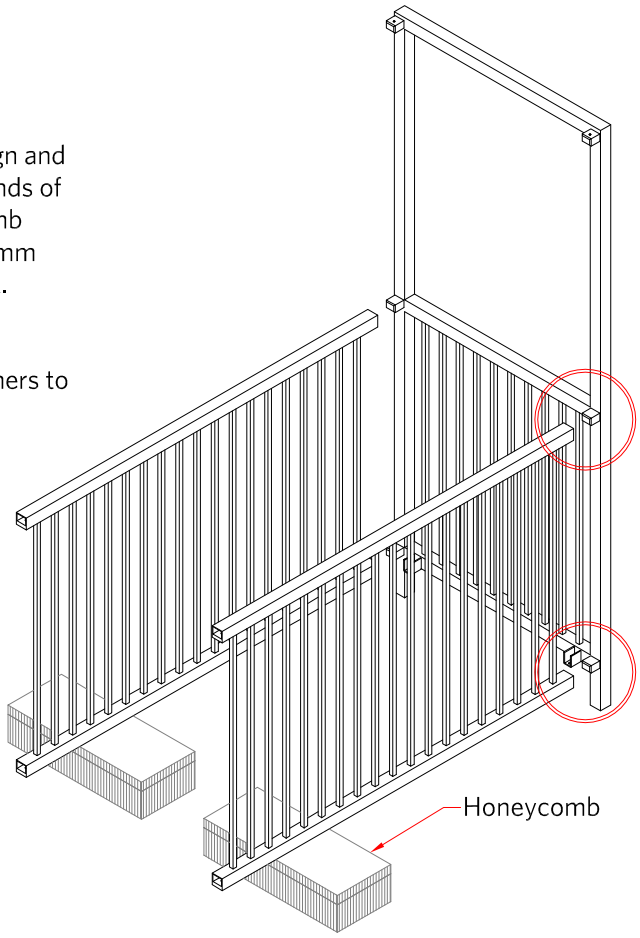


**FIGURE 1-A**

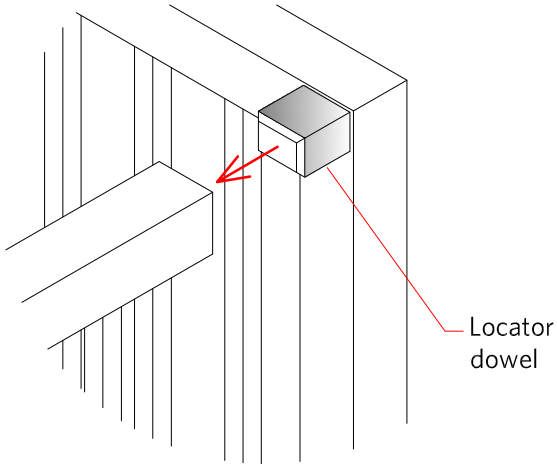


**FIGURE 1-B**

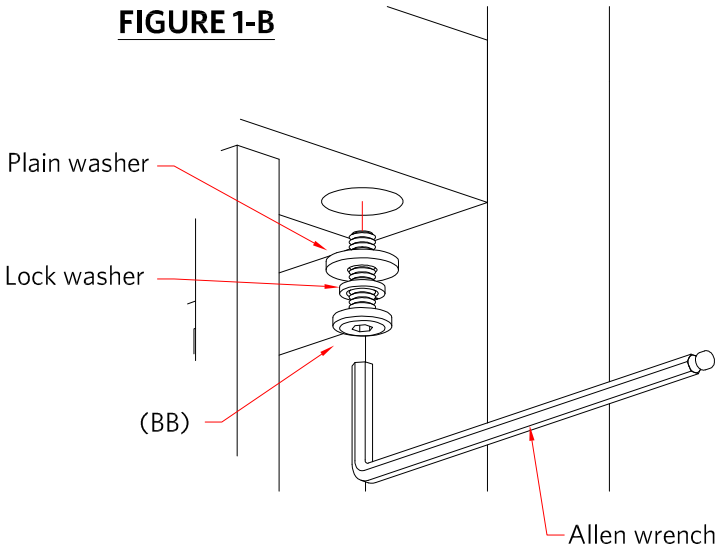


## HARDWARE NEEDED FOR STEP #1:

(BB) 1/4" x 1" BOLT = 4 PCS

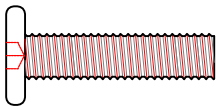

LOCK WASHERS 1/4" = 4 PCS

PLAIN WASHERS 1/4" = 4 PCS

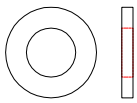

ALLEN WRENCH = 1PC

## STEP #2
## CANOPIES & 1ST END PANEL ASSEMBLY

Attach the canopies to the end panel as per illustration in FIGURE 2-A and FIGURE 2-B.

NOTE: KEEP HOLDING THE CANOPIES WHILE DOING NEXT STEP.

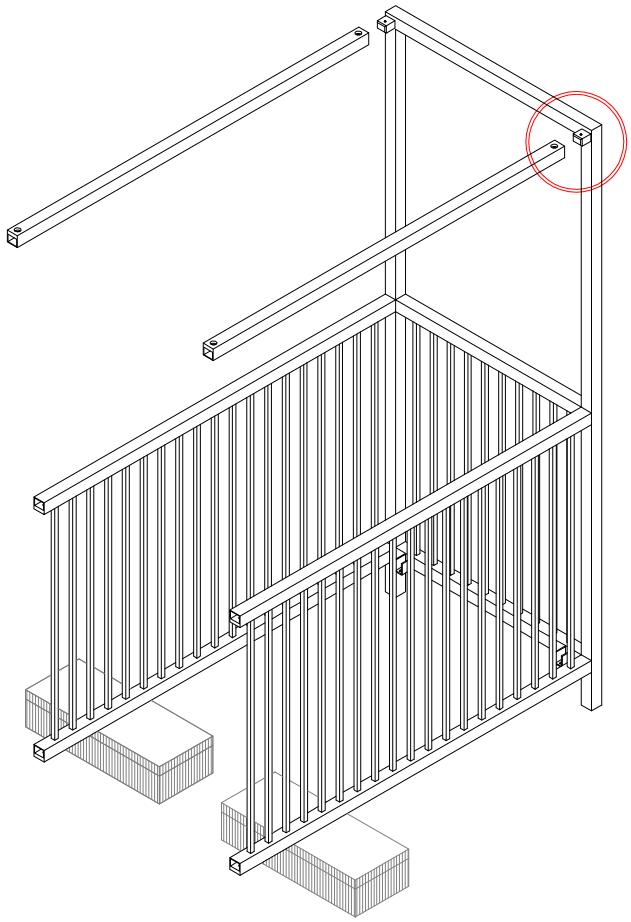

**FIGURE 2-A**

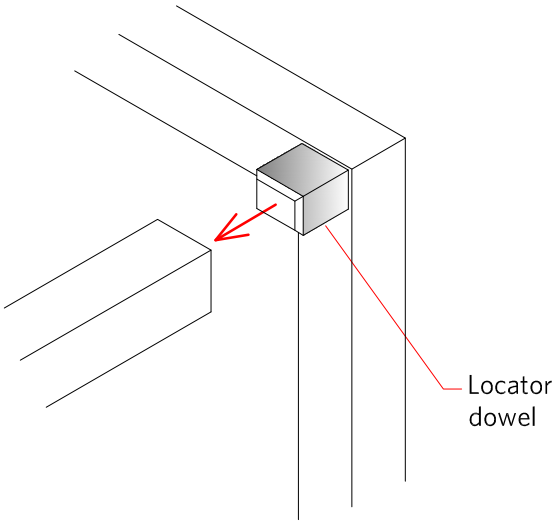


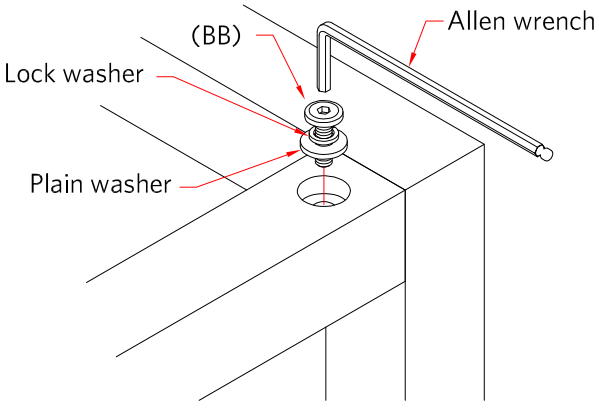


**FIGURE 2-B**

## HARDWARE NEEDED FOR STEP #2:

(BB) 1/4" x 1" BOLT = 2 PCS

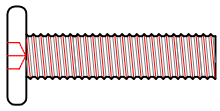

LOCK WASHERS 1/4" = 2 PCS

PLAIN WASHERS 1/4" = 2 PCS

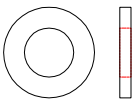

ALLEN WRENCH = 1PC

## STEP #3
## 2ND END PANEL ASSEMBLY

STEP #3.1
Bring the second end panel in upright position. Align the locator dowels on the end panel to the holes on the ends of the side rails and the canopies.

STEP #3.2
Insert Allen bolts (BB) together with lock washers and plain washers to fix the end panel to the side rails and the canopies. Refer to FIGURE 3-A and FIGURE 3-B.

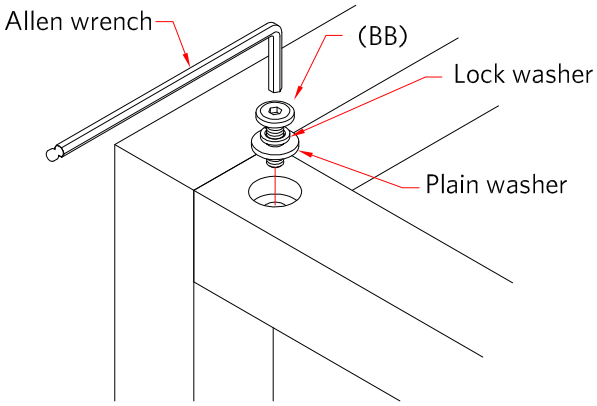


**FIGURE 3-A**

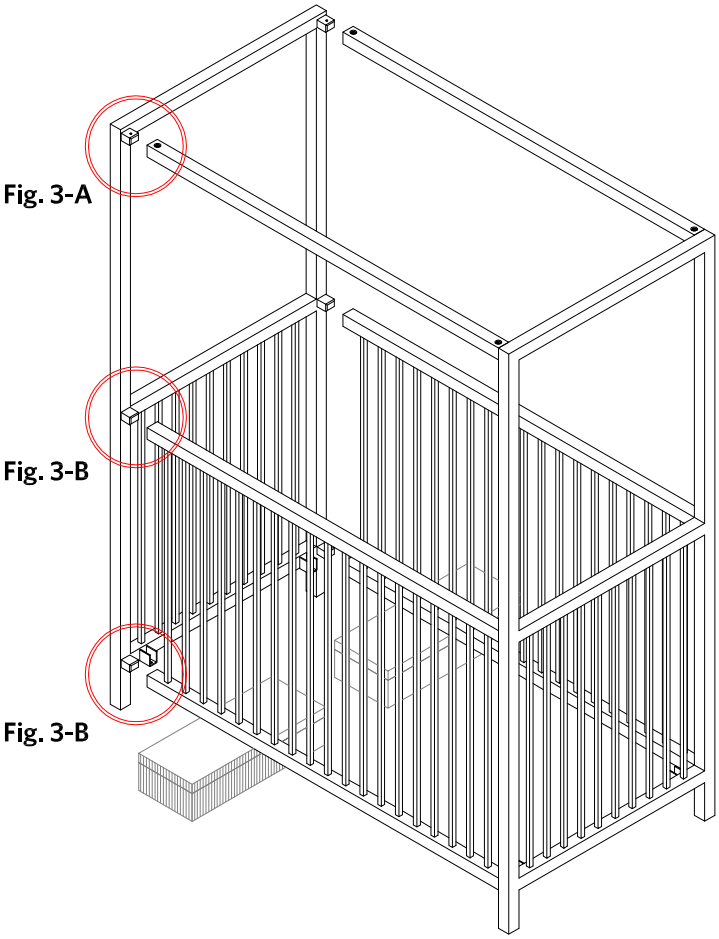


**FIGURE 3-B**

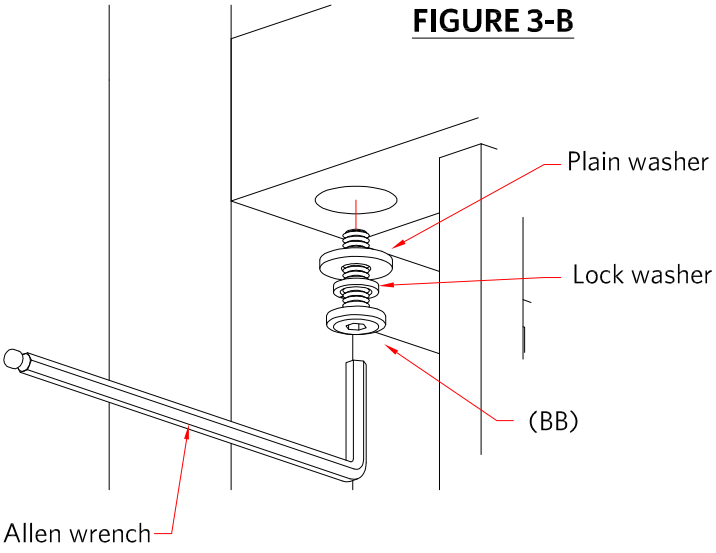


## HARDWARE NEEDED FOR STEP #3:

(BB) 1/4" x 1" BOLT = 6 PCS

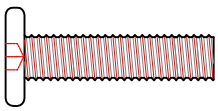

LOCK WASHERS 1/4" = 6 PCS

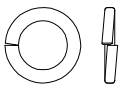

PLAIN WASHERS 1/4" = 6 PCS

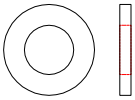

ALLEN WRENCH = 1PC

# STEP #4
## MATTRESS SUPPORT ARM ASSEMBLY
## STABILIZER RAIL ASSEMBLY
## MATTRESS HEIGHT ADJUSTMENT

STEP #4.1
Lay Mattress Support flat with Stabilizer Rail on each side

**NOTE:**
On each end of the arm of the Mattress Support, there is a hole for the bolt to pass through that corresponds to the holes located in the frame of the Mattress Support.

STEP #4.2:
Insert the bolt into the desired hole of the frame through the hole on the arm support. Fasten the bolt with plain washer, lock washers & hexagonal nut provided. Repeat procedure on other arms of the Mattress Support. Please see FIGURE 4-A.

**WARNING:**
Set the Mattress Support to the desired height by adjusting the Support Arms. The Mattress Support should be at its highest setting for newborns, then adjusted to the lower positions as the child grows and becomes mobile. Once the child is able to stand, the Mattress Support should be at its lowest position.

STEP #4.3:
Install the Stabilizer Rail at ends of the arm support as illustrated on FIGURE 4-B.

**FIGURE 4-A**

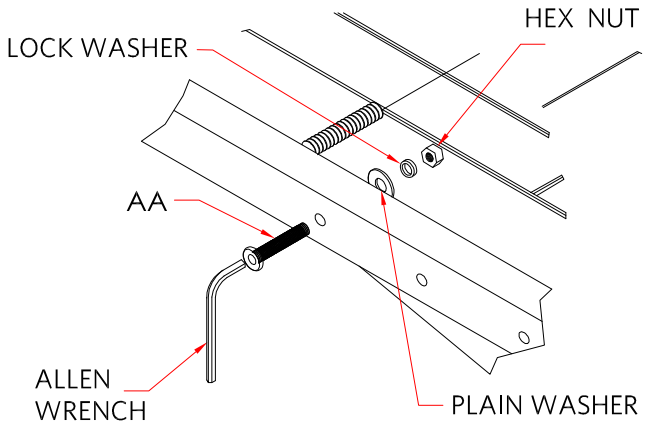


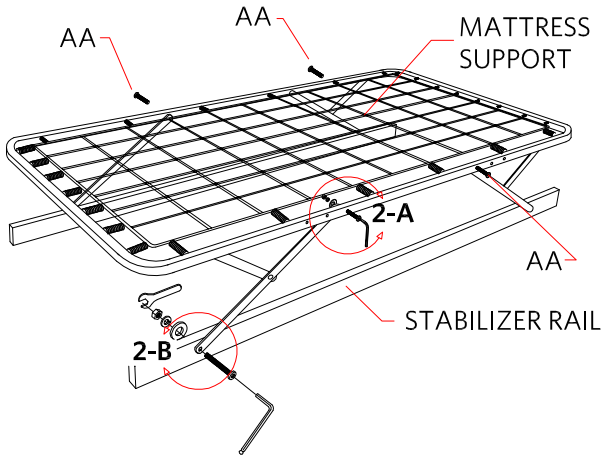


**FIGURE 4-B**

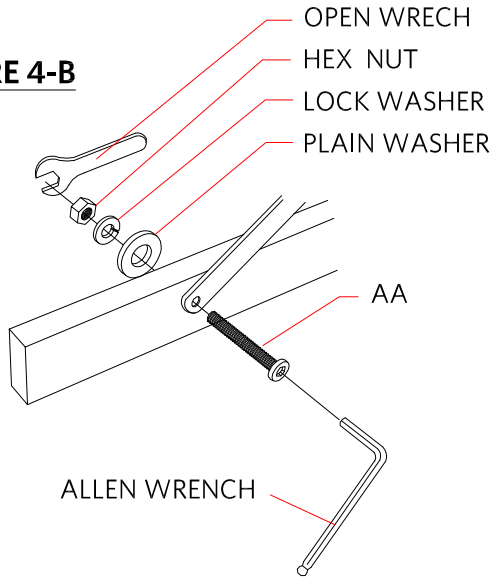


## HARDWARE FOR STEP #4:

(AA) 1/4" X 1-3/8" BOLT = 8 PCS

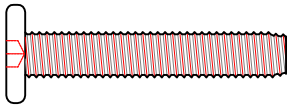

HEXAGONAL NUT 1/4" = 8PCS

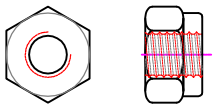

LOCK WASHER 1/4" = 8 PCS

PLAIN WASHER 1/4" = 8 PCS

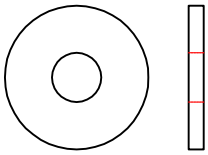

OPEN WRENCH = 1 PC

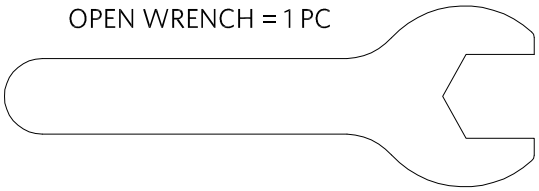

ALLEN WRENCH = 1 PC

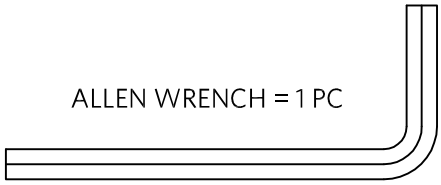

## STEP #5
## INSTALLATION OF STABILIZER RAILS INTO THE END PANELS

STEP #5.1
On inside surface of both end panels are metal brackets, designed to hold the stabilizer rails. Set both ends of the stabilizer rails into brackets.

STEP #5.2
Secure the stabilizer rails to the metal brackets by using Allen bolts (BB), lock washers and plain washers as per illustration in FIGURE 5.

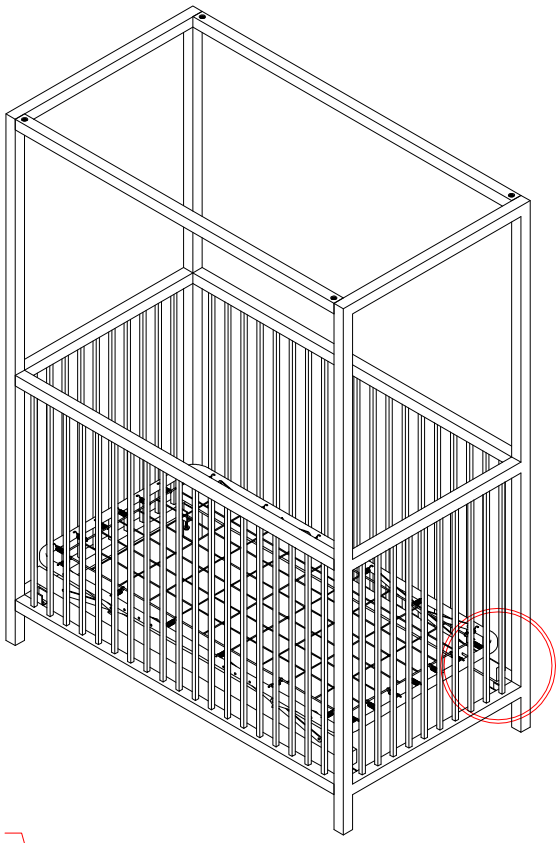

### HARDWARE FOR STEP #5:

(BB) 1/4" x 1" BOLT = 4 PCS

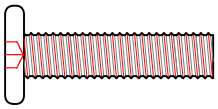

LOCK WASHER 1/4" = 4 PCS

PLAIN WASHER 1/4" = 4 PCS

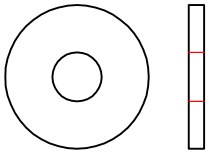

ALLEN WRENCH = 1 PC

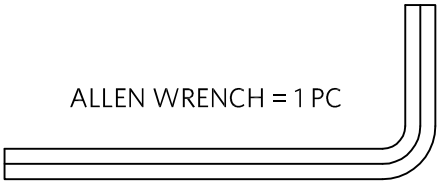

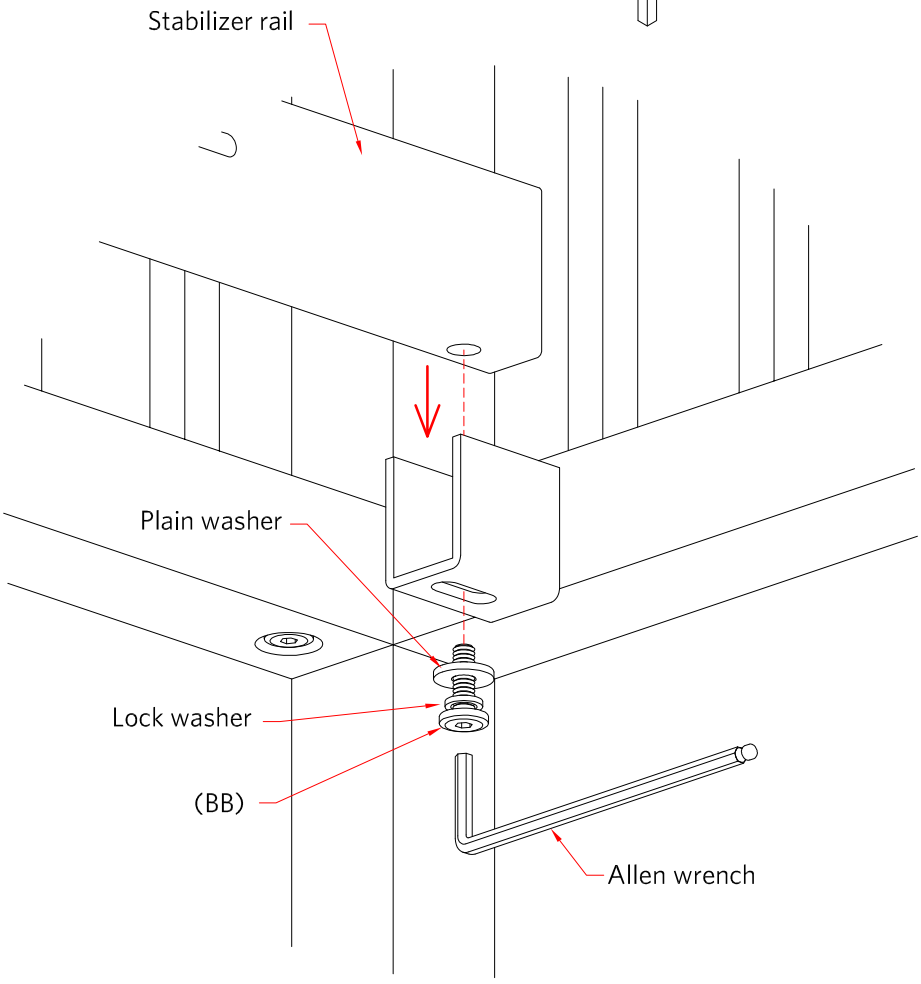


**FIGURE 5**