baby&child
RESTORATION HARDWARE

# WYLER DRESSER WIDE TOPPER

## PARTS INCLUDED

A [1] DRESSER

B [1] TOPPER

| NO. | ITEM | DESCRIPTION | QTY. |
|---|---|---|---|
| 1 | | Mending Plate | 2 pcs. |
| 2 | | Phillips Screws M4 x 15mm | 8 pcs. |
| 3 | | Plastic Bracket | 4 pcs. |
| 4 | | Restraint Strap | 2 pcs. |
| 5 | | Phillips Screws M4 x 30mm | 4 pcs. |
| 6 | | Phillips Screws M4 x 20mm | 4 pcs. |
| 7 | | Plastic Anchor | 4 pcs. |

## ASSEMBLY INSTRUCTIONS

1. Lift up the topper [B] and gently place on top of the dresser [A]. Check the distance on both sides of the topper [B] to make sure it is centered correctly.

2. After checking the distance on both sides, engage the metal mending plates [1] at the back of the topper [B] and the dresser [A] using screws [2] provided.

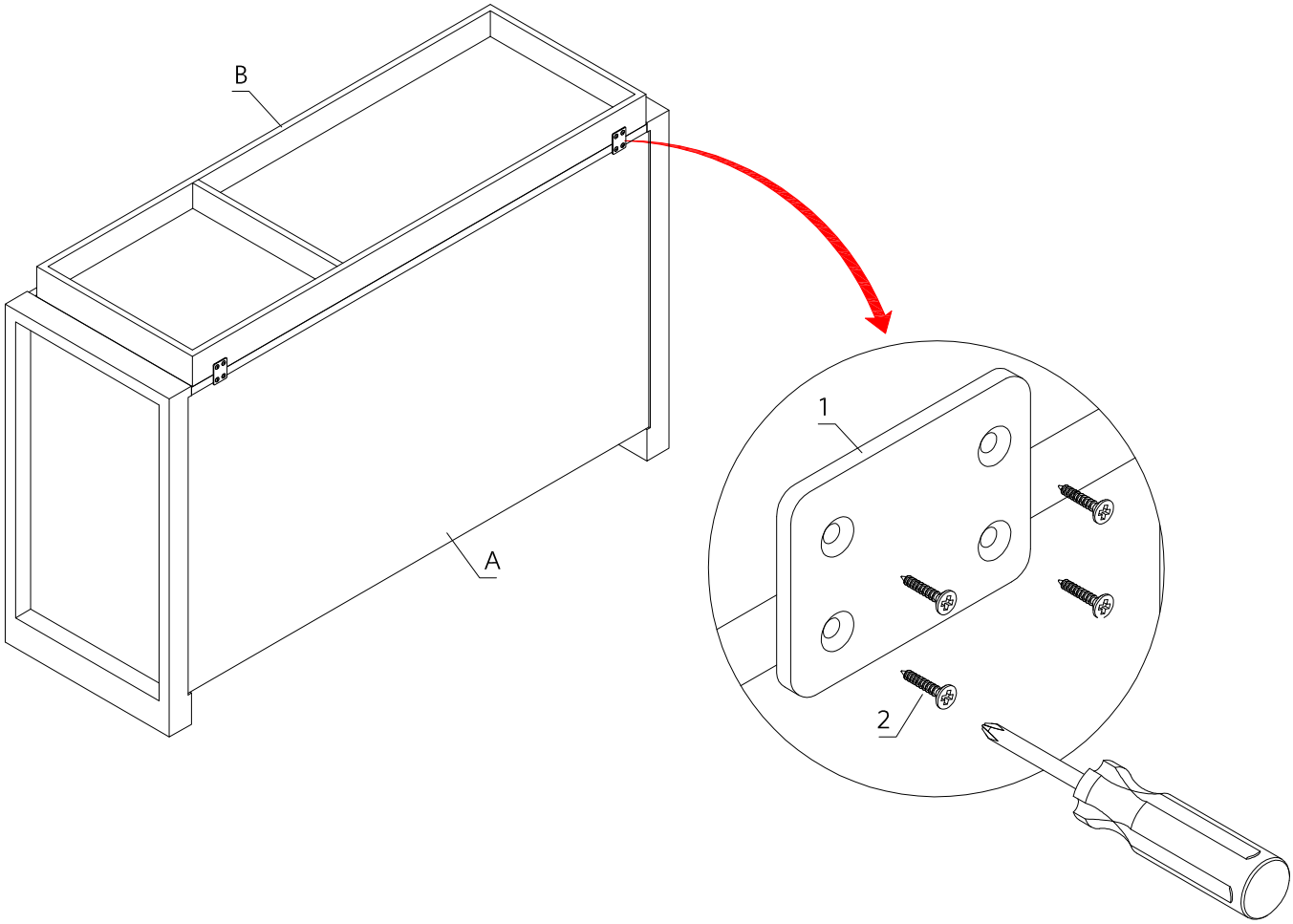

baby&child
RESTORATION HARDWARE

# WYLER DRESSER WIDE TOPPER

## FURNITURE TIPPING RESTRAINT INSTRUCTIONS

Young children may be injured by tipping furniture. The use of a tipping restraint is highly recommended. When properly installed, this restraint could provide protection against the unexpected tipping of furniture due to small tremors, bumps or climbing. We recommend mounting this restraint to a wall stud.

**WARNING:** This product is only a deterrent. It is not a substitute for proper adult supervision.

## INSTALLATION INSTRUCTION

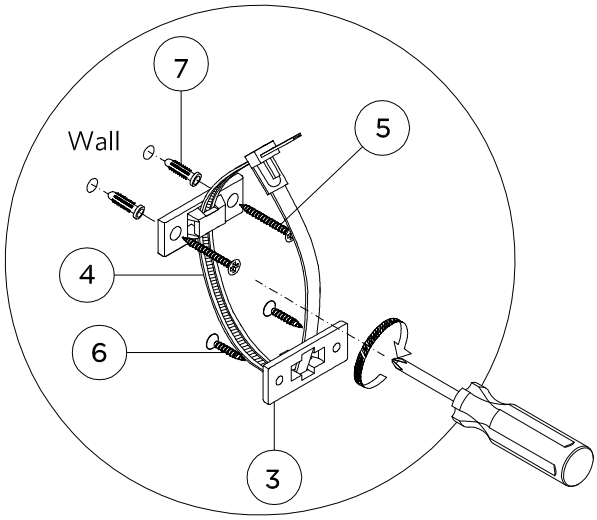


1. Attach two of the mounting brackets near the top back edge of the dresser by inserting the shorter screw.
2. Determine the final position of the dresser. Mark locations on the wall approximately 2" below the brackets mounted to the back of the dresser.
3. Drill a shorter hole into the wall stud. If wall stud is not available, drill a hole into the wall and insert plastic anchor. Gently tap the anchor until the flange is flush with the wall.
4. Attach the second set of brackets by inserting the longer screw through the bracket and into the wall.
5. Place the furniture so that the brackets on the back edge are in line with the brackets in the wall.
6. Lace one end of the nylon restraint strap down through each bracket. Bring both ends together and slide the beaded end until it snap locks into the keyhole slot.
7. To double lock; return the beaded end back through the keyholes as shown.
8. Check to make sure the straps are securely laced and locked to the brackets.

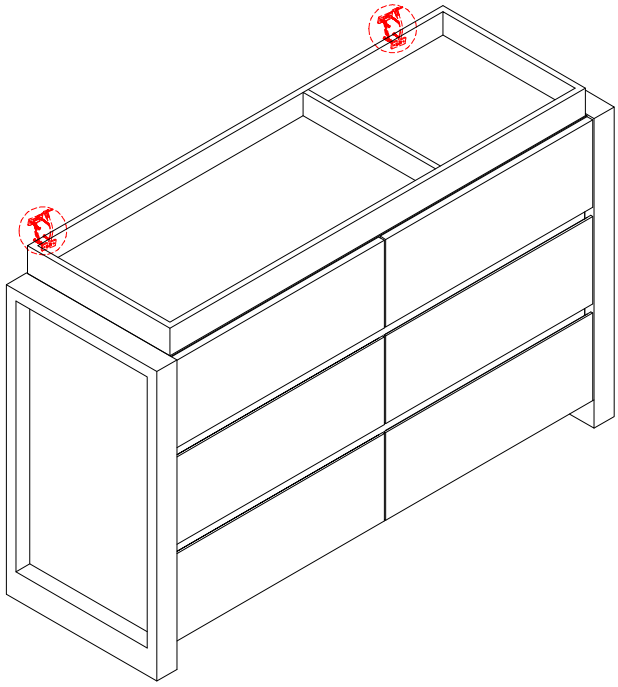

## CARE INSTRUCTIONS

1. Dust often using a clean, soft, dry and lint-free cloth.
2. Blot spills immediately and wipe with a clean, damp, cloth.
3. We do not recommend the use of chemical cleansers, abrasives or furniture polish on our lacquered finish.

## IMPORTANT SAFETY INSTRUCTIONS

1. Please read all instructions carefully before assembling.
2. For your safety, assembly by two or more adults is strongly recommended.
3. Keep instructions for future use.
4. Use only vendor supplied hardware to assemble. Using unauthorized hardware could jeopardize the structural integrity of the item.